ALLMARK DOOR
All Doors. All Docks. All Service. All the Time.

1-(800)-417-9995

Loading Dock Equipment

DOCK SEALS

Key Features

- Premium-Grade Polyurethane Foam Pads
- Premium High-Tear Resistant Fabrics
- Tough Wear Pleats and Guide Stripes
- Heavy-Duty Wood Mounting Base
- Galvanized Steel Mounting Hardware

Major Benefits

- **Proven Performance:**
  Laboratory-tested fabrics and tight-sealing properties provide environmental protection against weather elements and contamination.
- **Reliable Safety:**
  High-visibility yellow guide stripes ensure proper trailer alignment with loading dock door, reducing potential accidents.
- **Advanced Durability:**
  High-cycle construction and tough wear pleats extend product life under the most rigorous conditions.

GET A QUOTE NOW 1-(800)-417-9995

Loading Dock Equipment

DOCK SEALS

ALLMARKDOORS.COM

General Specifications

Sizes	8'W x 8'H | 8'W x 9'H | 8'W x 10'H
Vertical Length	8' / 9' / 10'
Common Options	18" Header | 12" Drop Curtain | Curtain Style Header
Durability Options	22 / 40 oz Vinyl | 16 / 40 oz Hypalon 16 / 40 oz Neoprene | Hight-Tear Resistant
Warranty	1-year guarantee against manufacturing defects in material and workmanship from date of installation.

Options

Decline

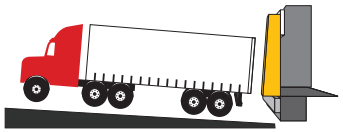

Incline

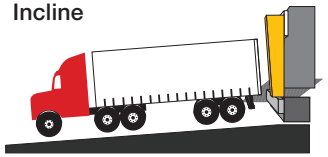

Drop Certain

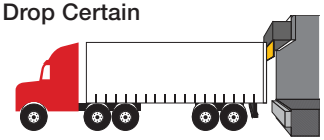

Rain Hood

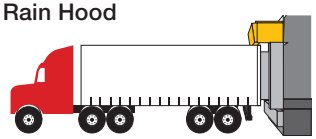

Metal Snow Hood

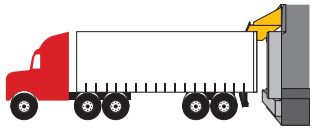

Beveled Side Pads

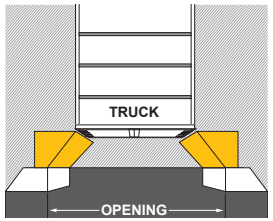

Technical Drawing

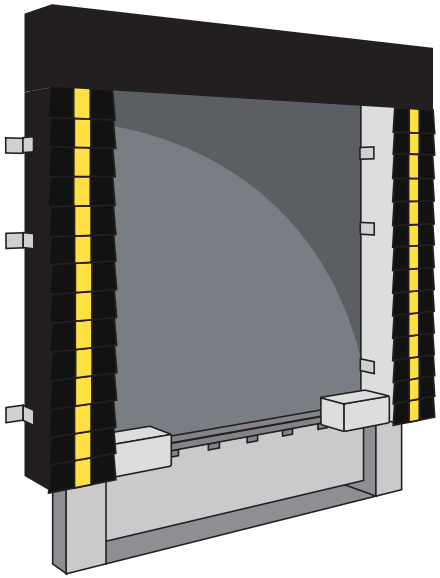

Optional Contact Face

Type 1

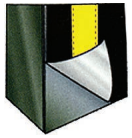

Type 2

Type 3

Type 4

Type 5

Colors

Pads

Black | Blue | Green | Brown | Tan

Guide Stripes

Yellow | Orange

Loading Dock Equipment

DOCK SHELTERS

Key Features

- Fiberglass-Reinforced Head Curtain Assembly
- Premium-Grade Polyurethane Foam Pads
- Premium High-Tear Resistant Fabrics
- Heavy-Duty Wood Mounting Base
- Galvanized Steel Mounting Hardware

Major Benefits

- **Reliable Performance:**
  Laboratory-tested fabrics and tight-sealing properties provide environmental protection against weather elements and contamination.
- **Proven Functionality:**
  Vinyl-covered high-density foam eliminates the need for steel protective bumpers and enhances shelter durability.
- **Low Maintenance:**
  High-cycle construction, free of mechanical or adjustable parts, prevents complications that could occur unexpectedly.

Loading Dock Equipment

DOCK SHELTERS

ALLMARKDOORS.COM

General Specifications

Standard Size	11’ 6” W x 11’ H
Accommodations	Carries 12’ to 13’ 5” high
Projections	18’, 24’, 30’ and 42’
Durability Options	22 / 40 oz Vinyl | 16 / 40 oz Hypalon 16 / 40 oz Neoprene | Hight-Tear Resistant
Warranty	1-year guarantee against manufacturing defects in material and workmanship from date of installation.

Optional Contact Face

Type 1

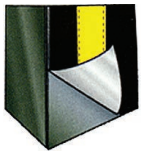

Type 2

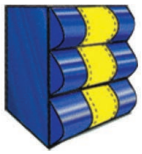

Type 3

Type 4

Type 5

Colors

Curtain

Black | Blue | Green

Brown | Tan

Guide Stripes

Yellow | Orange

Technical Drawing

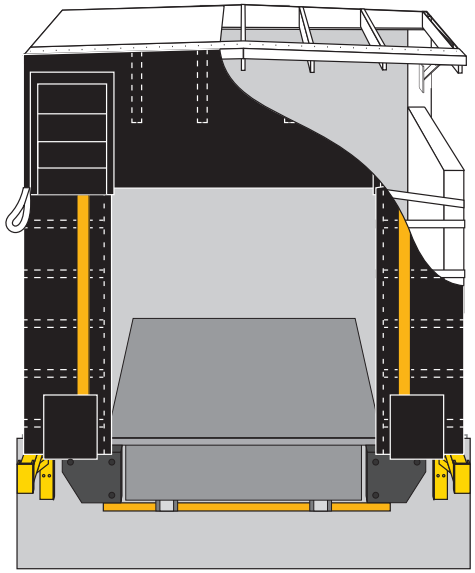

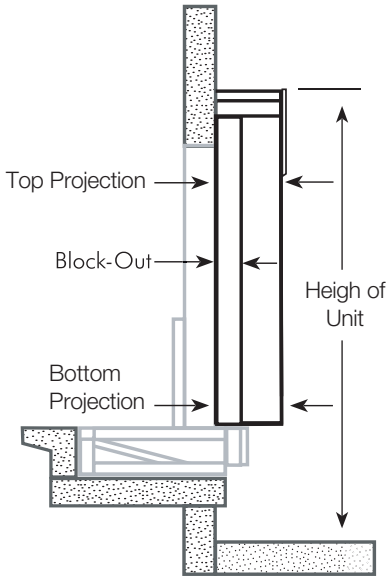

Top View

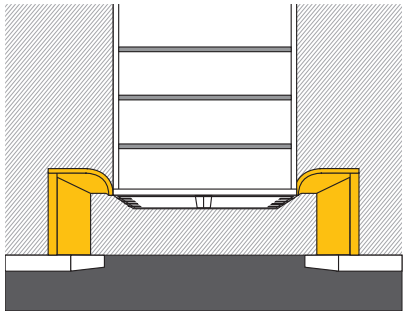

Side View

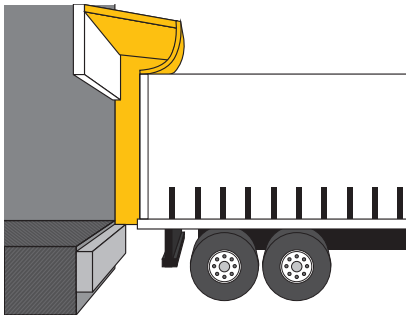

ALLMARK DOOR
All Doors. All Docks. All Service. All the Time.

1-(800)-417-9995

Loading Dock Equipment

TOP SEALS

Key Features

- Galvanized Steel Frame and Sheeting
- Pressure-Treated Lumber
- Double-Layered Premium Fabric
- Foam-Filled Sweeper Pad
- Galvanized Steel Mounting Hardware

Major Benefits

- **Reliable Performance:**
  Combines weight with gravity to force water to run off the sides, simultaneously creating a barrier against airborne contaminants.
- **Enhanced Safety:**
  Top seals can be installed above new or existing dock seals, maximizing environmental safety at the loading dock.
- **Low Maintenance:**
  Rugged steel mounting hardware and premium-durability fabrics ensure an extended product lifecycle with little to no maintenance.

GET A QUOTE NOW 1-(800)-417-9995

Loading Dock Equipment

TOP SEALS

ALLMARKDOORS.COM

General Specifications

Dimensions	120” W x 24” with a 24” drop
Base fabric	40 oz. Hi-tear vinyl
Foam	Dual-density foam
Structure	Pressure-treated lumber with fiberglass sheeting to prevent fading or cracking.
Optional	• Additional drop-in head pad • Additional widths • Snow-load options
Warranty	1-year guarantee against manufacturing defects in material and workmanship from date of installation.

Technical Drawing

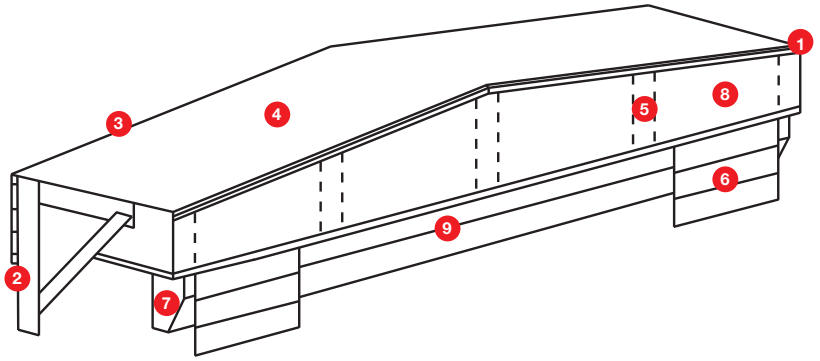

1. Galvannized Trim Angle
2. Galvannized Side Support Bracket
3. Galvannized Steel Frame
4. Galvannized Sheeting
5. Stays
6. 10" x 20" Wear Flaps/Pleats
7. Foam Filled Sweeper Pad
8. Storage Curtain
9. Double Layer of Fabric 40 oz.
10. High options

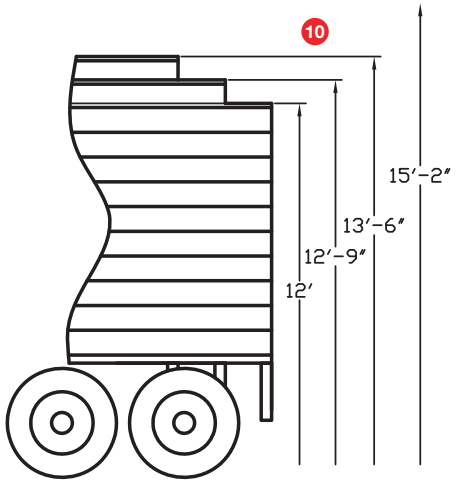

Product Overview

Trailer top seal automatically pushes down across the full width of the trailer top, ensuring complete protection against water entering the dock area.

Fabric and Color Options

- 40oz Hi-Tear Vinyl
- 50oz Hi-Tear Vinyl
- 40oz Hi-Performance Hypalon

Black | Blue | Brown | Green